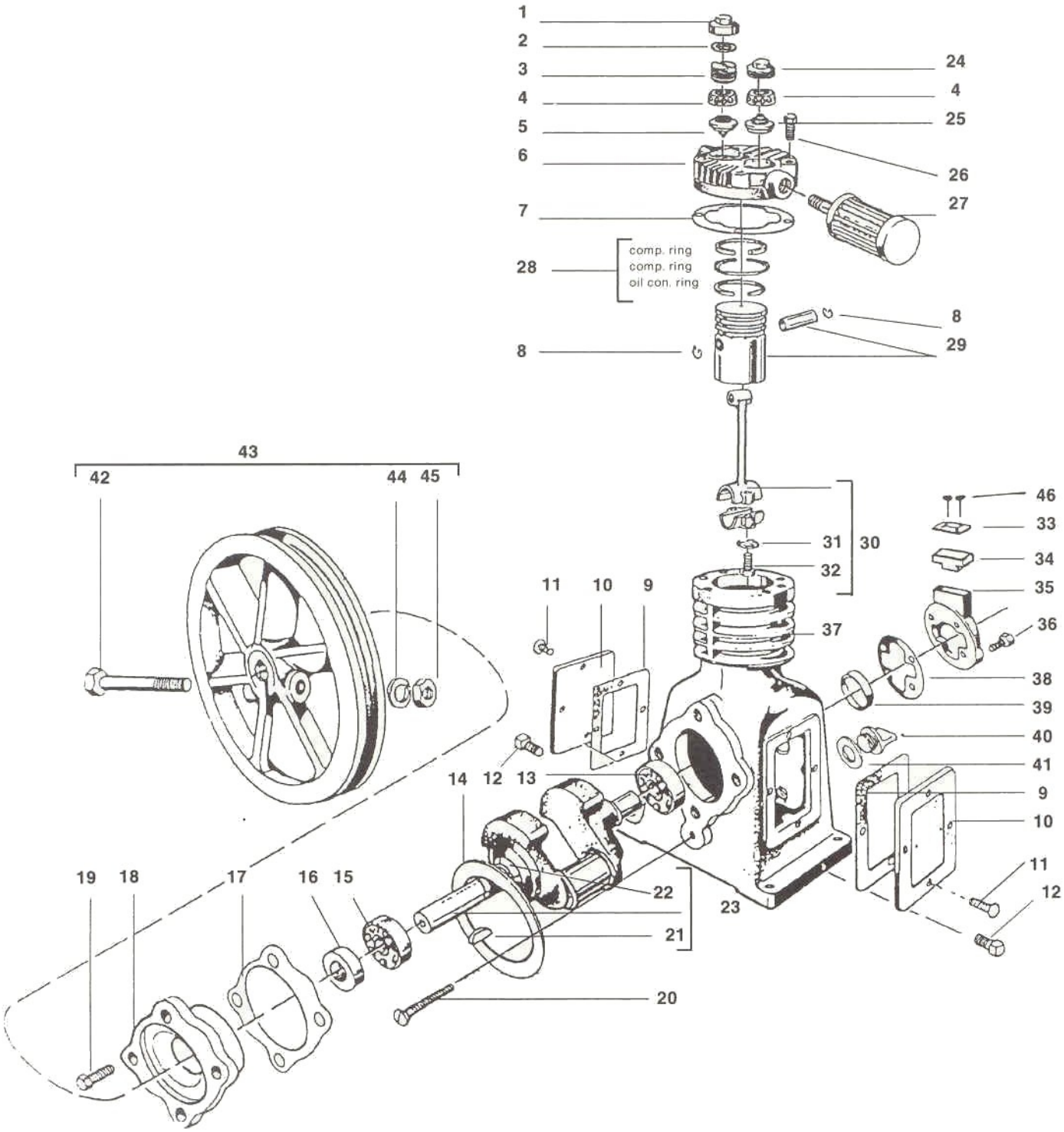
1
2
3
4
5
6
7
28
comp. ring
comp. ring
oil con. ring
8
8
24
4
25
26
27
29
43
42
44
45
46
33
34
35
36
31
30
32
37
11
10
9
38
39
40
41
9
10
11
12
14
12
13
19
18
17
16
15
22
21
23
20

The Item Numbers in the Chart(s) below refer to the Pump Breakdown on Page 2.

Item:	Part Number	Qty	Description
1	1202-88	1	Exhaust Valve Cap
2	120-28	1	Gasket
3	1202-89	1	Exhaust Valve Plug
4	1201-92	2	Valve Seat Spacer
5	120-4405	1	Exhaust Valve Assembly
6	120-124	1	Cylinder Head
7	120-126	1	Head Gasket
8	120-20	2	Snap Ring
9	38513-122	2	Gasket
10	120-11	2	Inspection Plate
11	SS-912	8	10-24 x 3/8" RHMS
12	SS-1215	1	1/8" Pipe Plug
13	120-23	1	Ball Bearing
14	1205-5	1	Oil Throw Ring
15	220-23	1	Ball Bearing (NLA)
16	23174-306	1	Oil Seal
17	38543-106	1	Large End Plate Gasket
18	37314-502	1	Large End Plate
19	SS-9	4	1/4-20 X 5/8" HHCS
20	SS-916	1	1-24 x 1-1/4" RHCS
21	SS-1569	1	5/8 x 1/8" Key #405
22	120-43	1	Oil Cup
23	120-450	1	Crankshaft/Oil Cup Assy (NLA)
24	1202-79	1	Intake Valve Plug
25	120-417-2	1	Intake Valve Assembly
26	SS-16	4	5/16-18 x 1-1/2 HHCS

Item:	Part Number	Qty	Description
27	350-9401	1	Air Intake Filter
28	KK-9833	1	Rink Kit (Std)
29	1205-412-1	1	Piston and Pin Assy (Std)
30	120-444-1	1	Rod and Cap Assy (NLA)
31	SS-3673	2	¼ Shakeproof Lock Washer
32	SS-6871	2	1/4-20 x 1" HHCS
33	36883-116	1	Crankcase Breather Cover
34	38554-110	1	Crankcase Breather Pad (NLA)
35	37721-110	1	Small End Plate (NLA)
36	SS-6871	4	1/4-20 x 1" HHCS (NLA)
37	37135-109	1	Cylinder/Crankcase (NLA)
38	120-128	1	Small End Plate Gasket
39	32233-121	1	Spacer (NLA)
40	NCB-303-1	1	Oil Filler Plug
41	SS-2670	1	'O' Ring
42	SS-32	1	3/8-16 x 3" HHCS
43	120-458	1	Flywheel 10" Dia, 'A' Section
44	SS-1502	1	3/8 Heavy Lock Washer
45	SS-657	1	3/8-16 Hex Nut
46	SS-01588	2	Screw (NLA)

Kits Available for the '120' Pump

Part Number	Qty	Description	Includes
45875-001	1	Complete Gasket Kit	# 2, 7, 9, 17, 34, 38, 41
VK-120	1	Valve Kit	# 2, 5, 25
OK-120	1	Overhaul Kit	# 16, 28, and (1) '45875-001', (1) 'VK-120'